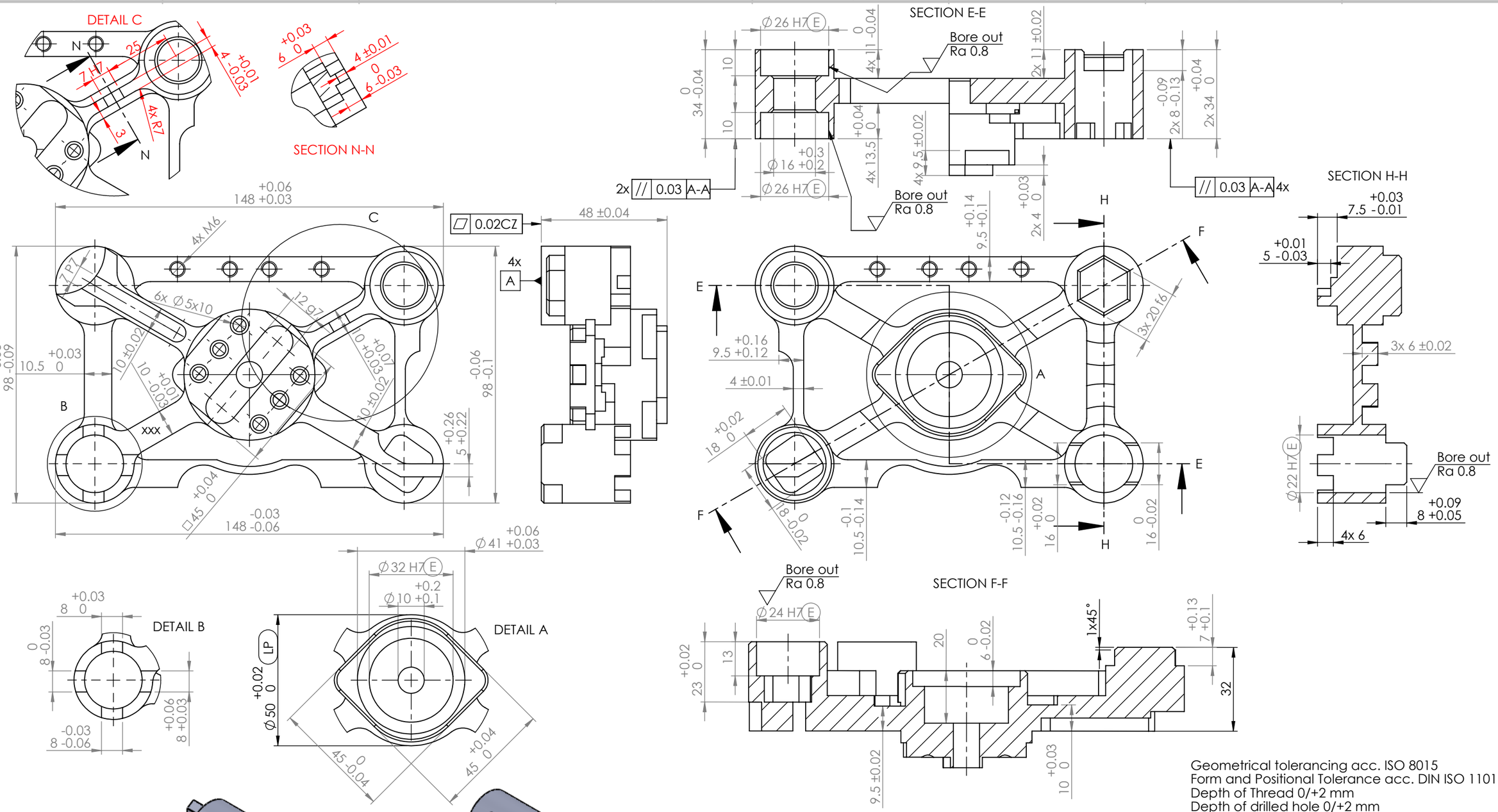

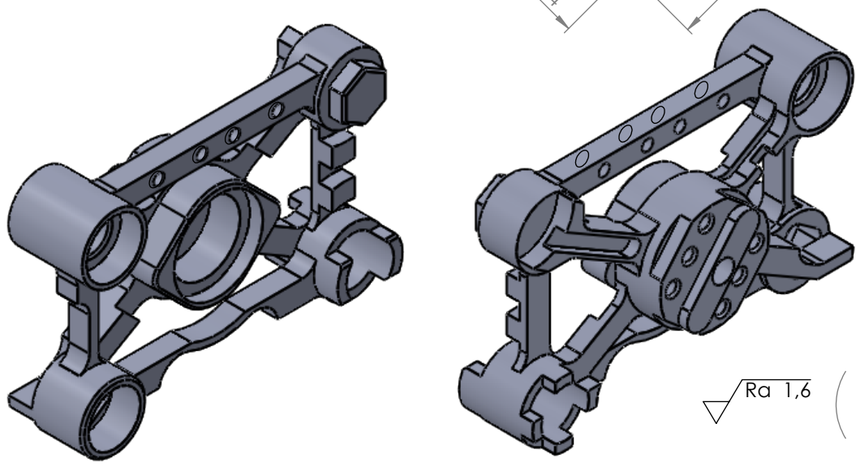

Ra 1,6

Drawing Number d-sm-2025-1003a	Material EN AW-6082/AlSiMgMn	General Tolerance ISO 2768-fH (fine)		
swiss skills	Customer swissmechanic	Drawn	20.05.2024	T. Meyer
		Checked	05.06.2024	S. Tönz
	Title Module 3 SwissSkills 2025 Less is more	Norm Checked	15.06.2024	J. Marti
		Approved		
		Revision	A	Format A3
		Scale 1:1	PAGE 1 OF 1	