Masse/Dimensions in mm

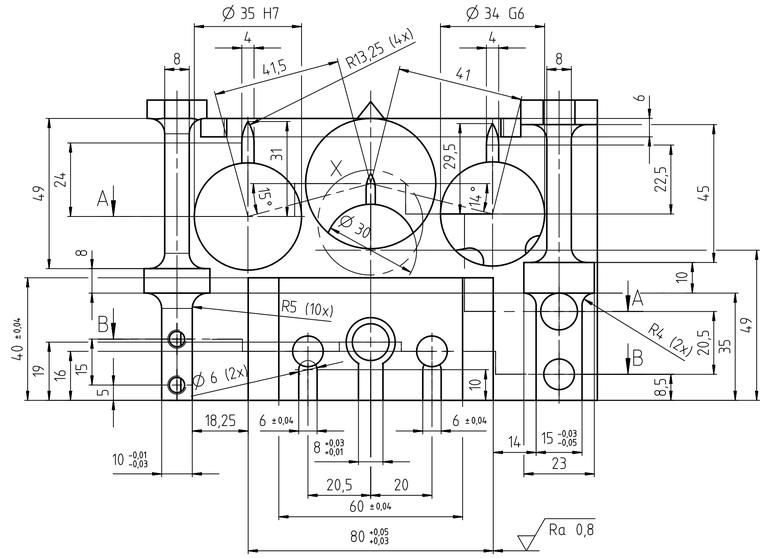

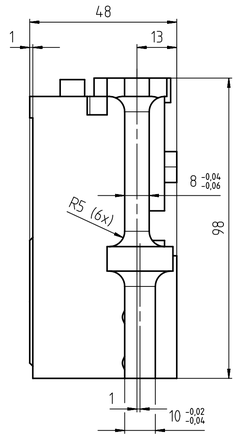

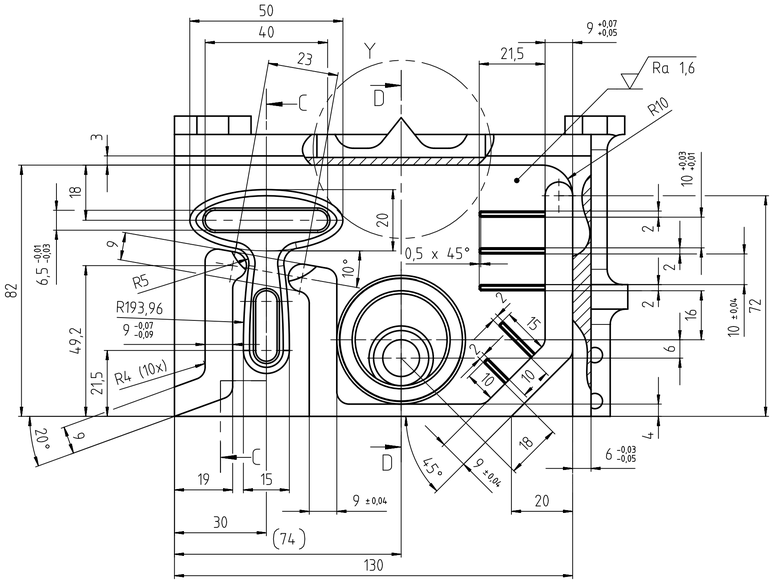

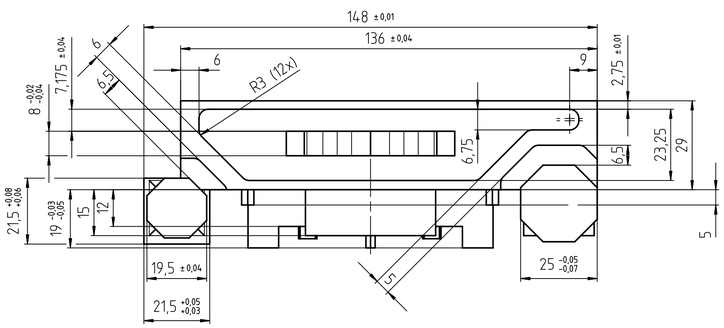

C-C

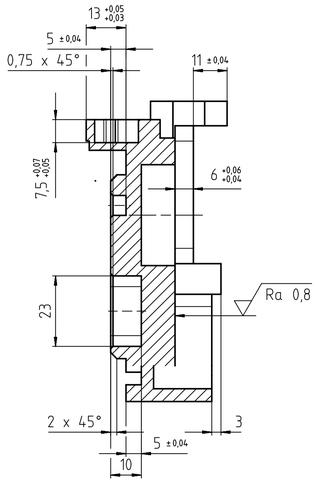

D-D

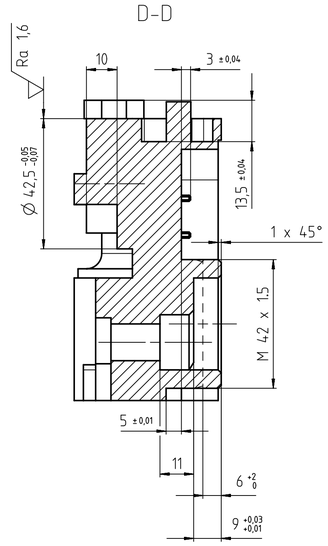

X (1:1)

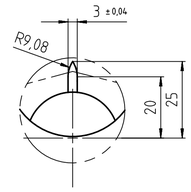

Y (1:1)

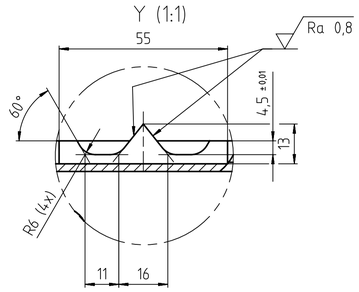

A-A

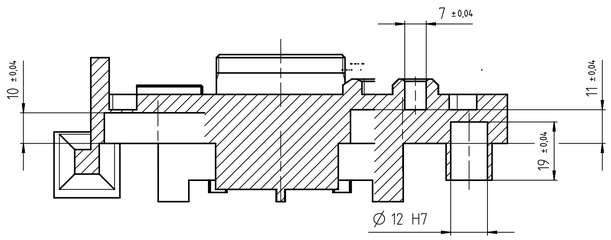

B-B

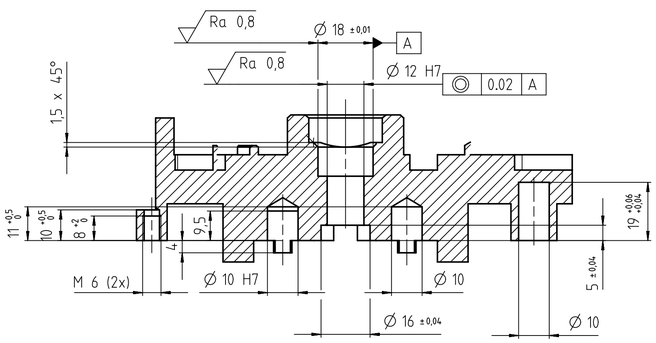

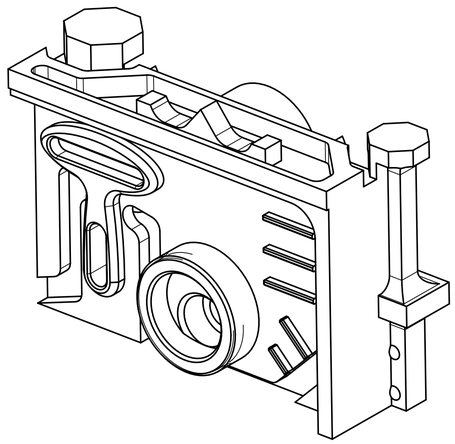

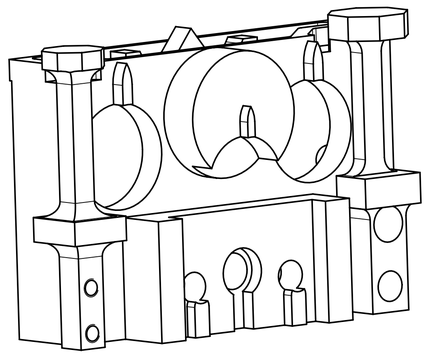

general tolerance ISO 2768-mK
Allgemeintoleranzen ISO 2768-mK
Form and Positional Tolerances acc. to DIN ISO 1101
Form- und Positionstoleranzen gem. nach DIN ISO 1101
not tolleranced linear dimension ±0.1
nicht tollerierte Längenmasse ±0.1

Ra 1.6

material: C45E (1.1191)

35 H7	+0,025 / 0
34 G6	+0,025 / +0,009
12 H7	+0,018 / 0
10 H7	+0,015 / 0
Fit size / Passmass	Limits / Grenzmasse

Test Project for 44ST WorldSkills
Competition in Abu Dhabi, United Arab Emirates 2017.
Copyright © 2017 Worldskills International.
All Rights Reserved.

Skill: CNC-Milling 07		
Scale: 1:1	Date: 30.09.17	Paper: A1
Drawn/Design by: Fasser Simon PEDS AG		Drawing No: WSC2017 TP07 L1 M3 ISO E
Description: Modul 3 7h		Rev: / Page: 1/1