Masse/Dimensions in mm

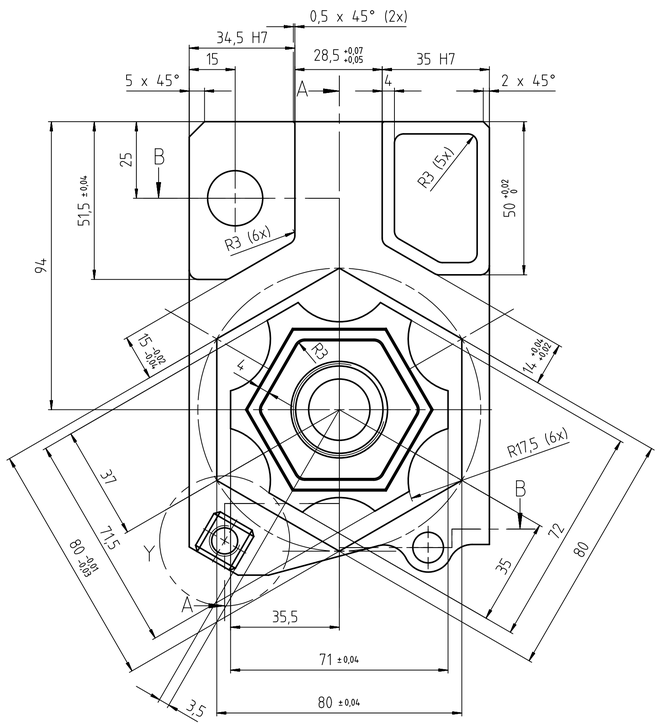

A-A

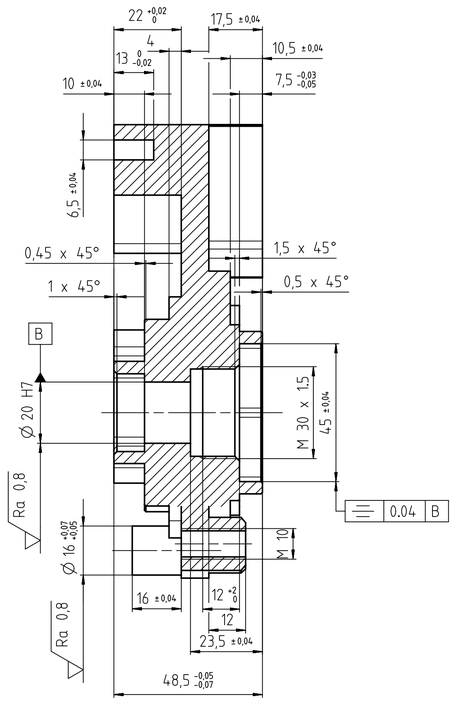

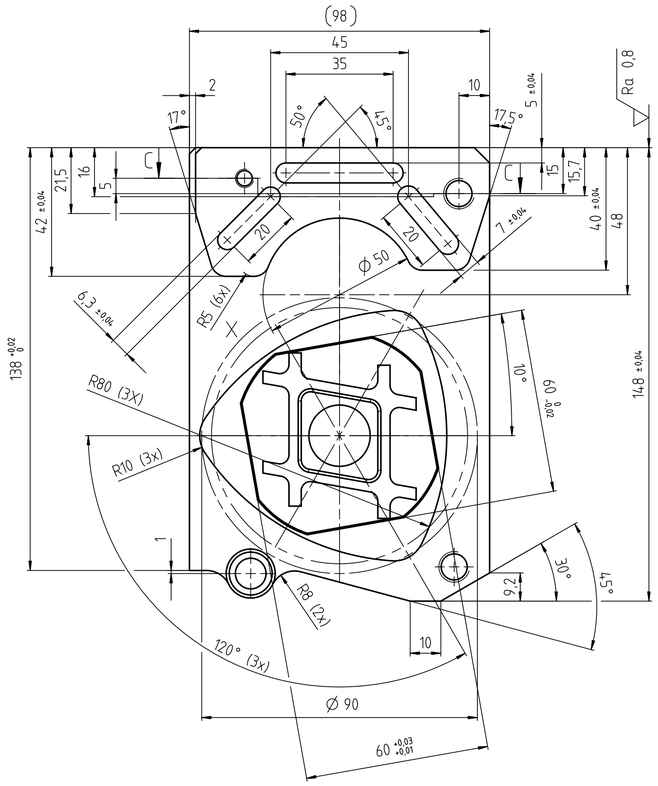

B-B

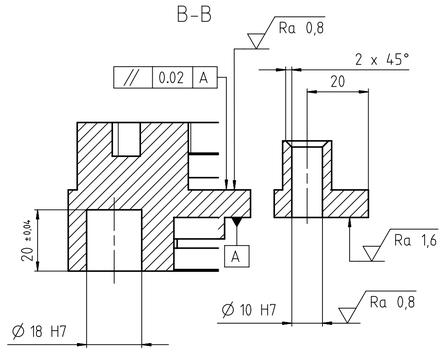

X (1:1)

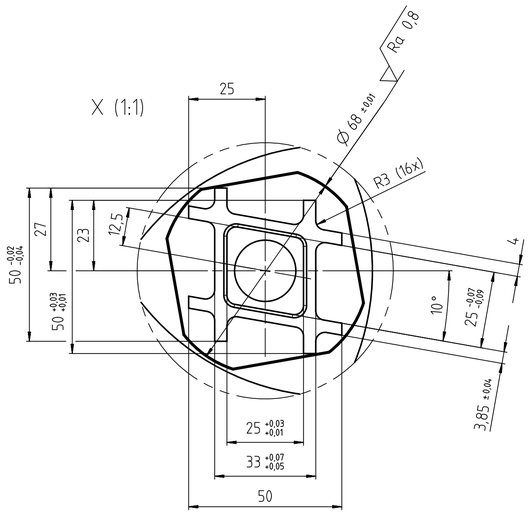

Y 1:1

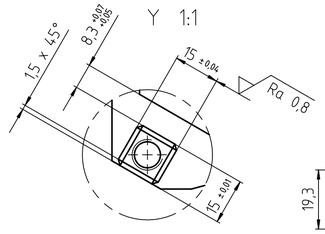

C-C

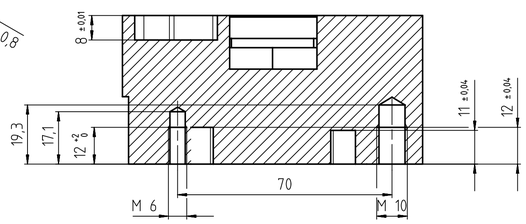

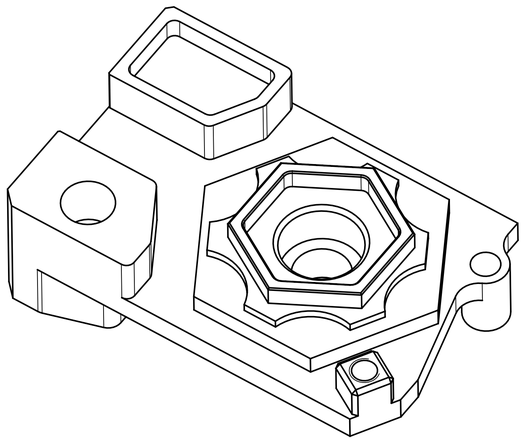

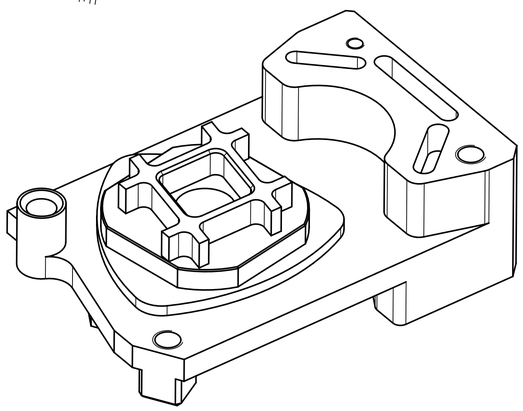

general tolerance ISO 2768-mK
Allgemeintoleranzen ISO 2768-mK
Form and Positional Tolerances acc. to DIN ISO 1101
Form- und Positionstoleranzen gem. nach DIN ISO 1101
not tolleranced linear dimension ± 0.1
nicht tollerierte Längenmasse ± 0.1

+0.4 0 | -0.2 -0.3

Ra 1.6

material: C45E (1.1191)

35 H7	+0,025 0
34,5 H7	+0,025 0
20 H7	+0,021 0
18 H7	+0,018 0
10 H7	+0,015 0
Fit size Passmass	Limits Grenzmasse

Test Project for 44ST WorldSkills
Competition in Abu Dhabi, United Arab Emirates 2017.
Copyright © 2017 Worldskills International.
All Rights Reserved.

Skill: CNC-Milling 07			PEDS Professional Engineering & Development Services
Scale: 1:1	Date: 30.09.17	Paper: A1	
Drawn/Design by: Fasser Simon PEDS AG			Drawing No: WSC2017 TP07 L1 M2 ISO E
Description: Modul 2 6h 15min			Rev: / Page: 1/1