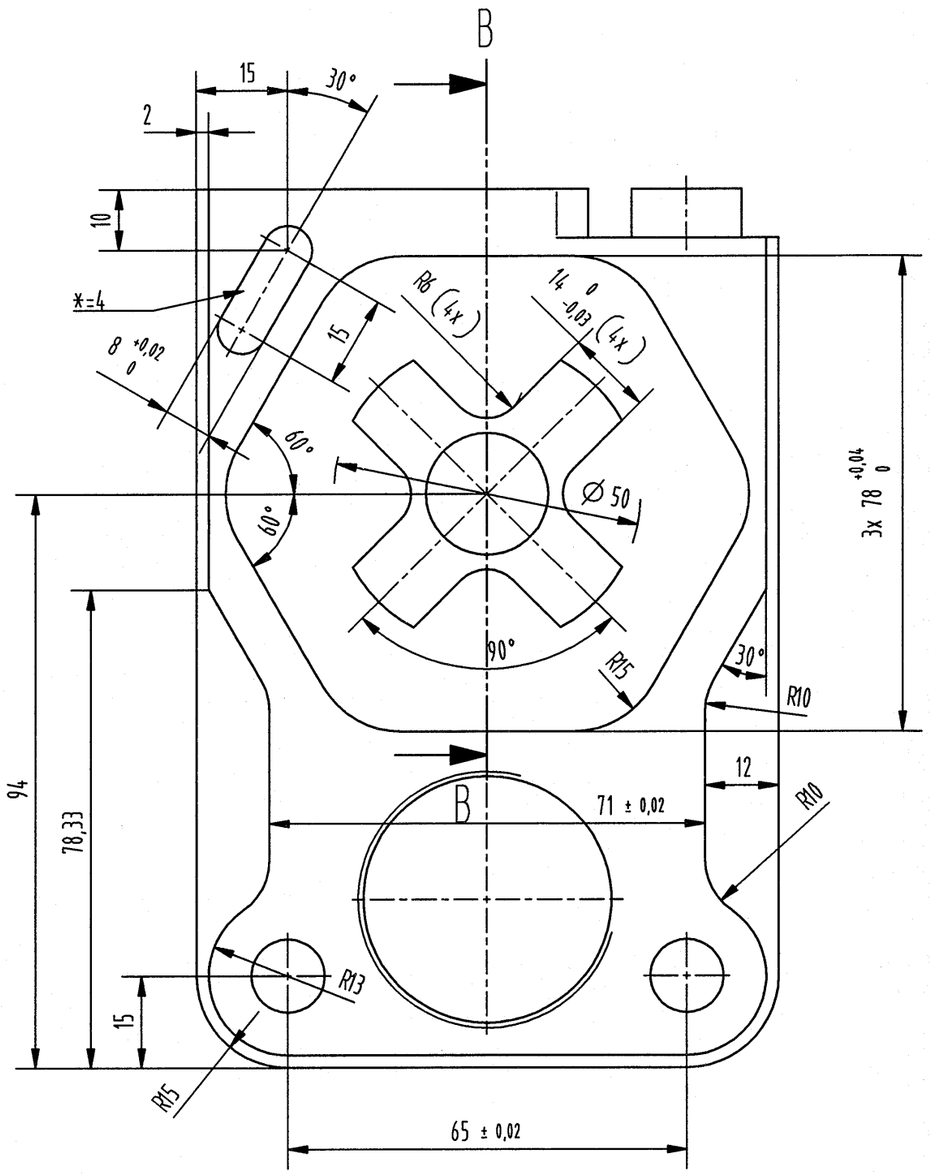

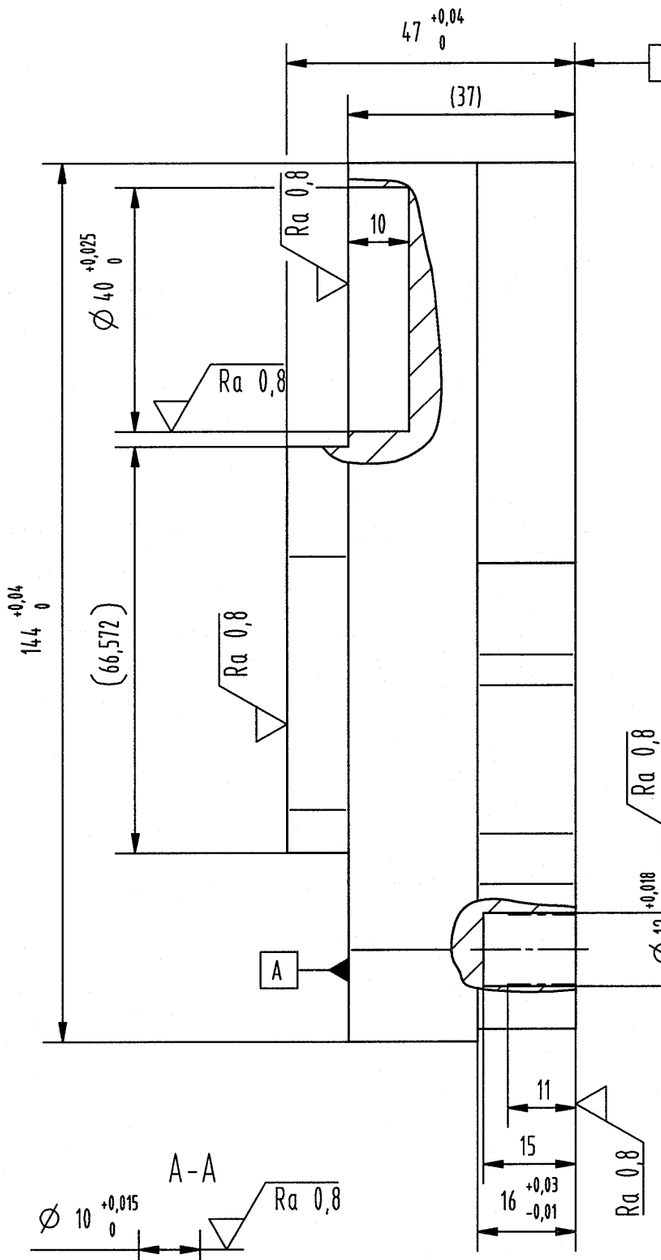

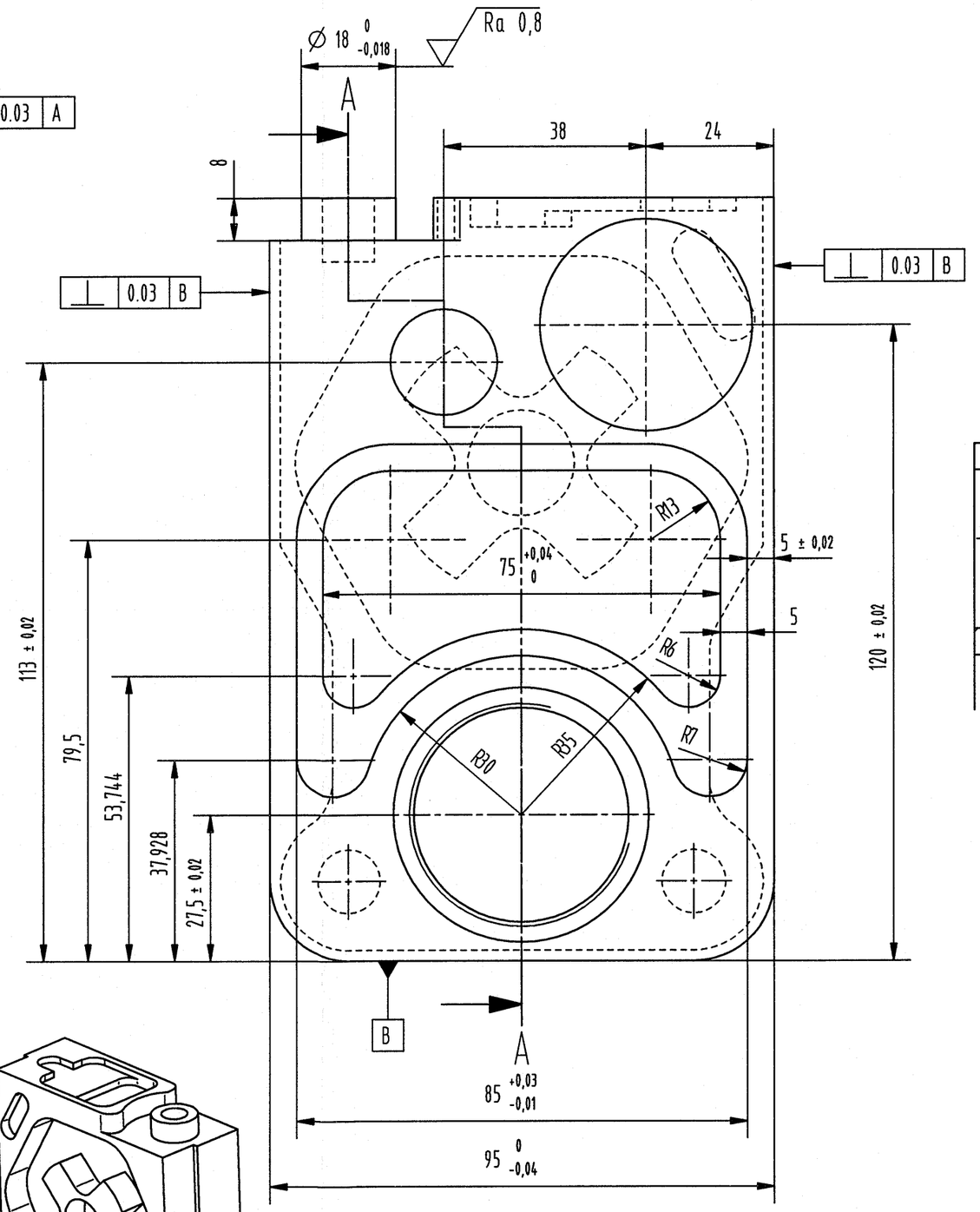

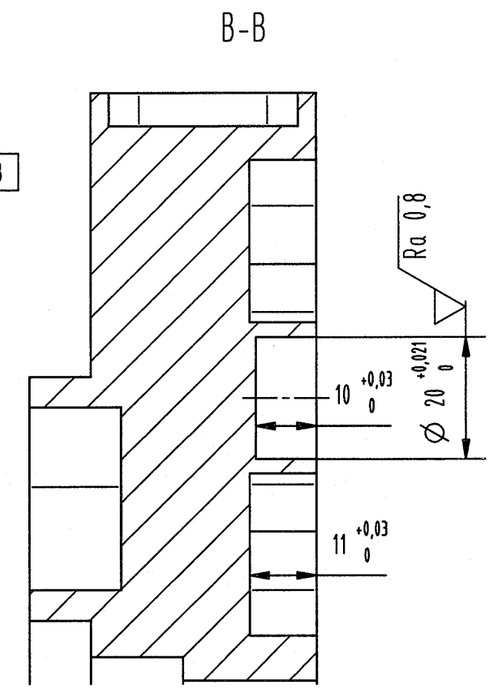

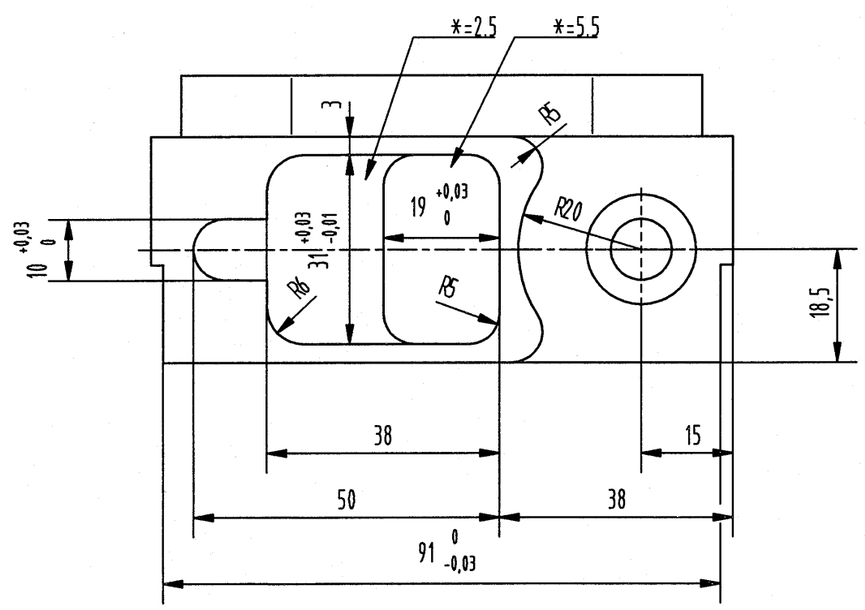

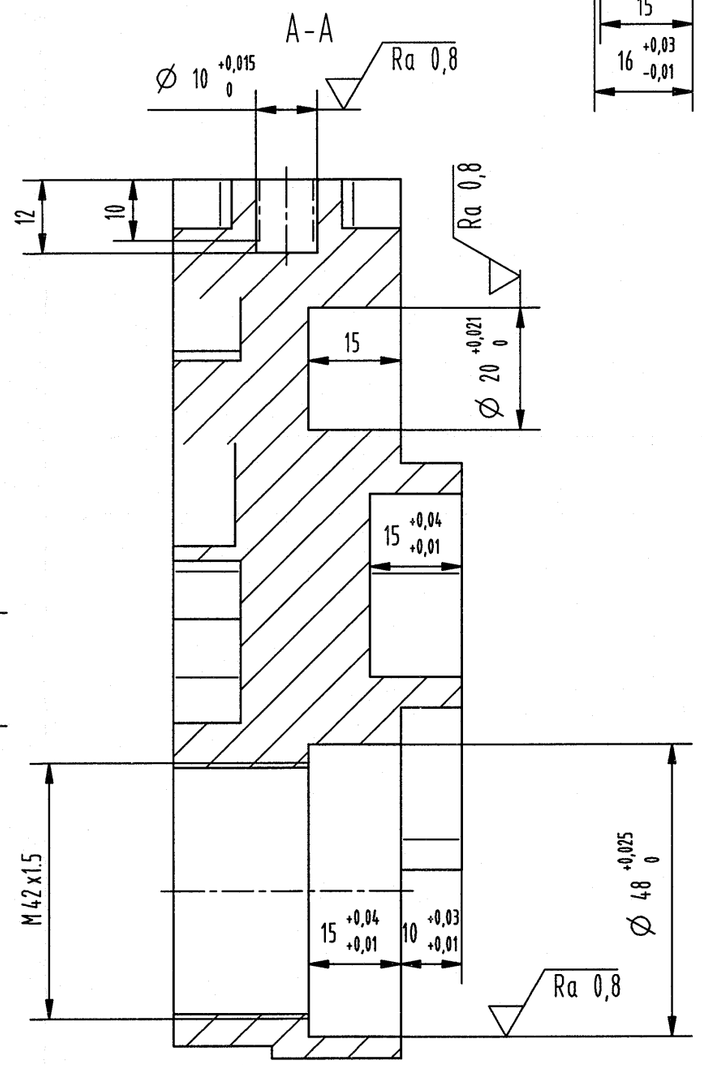

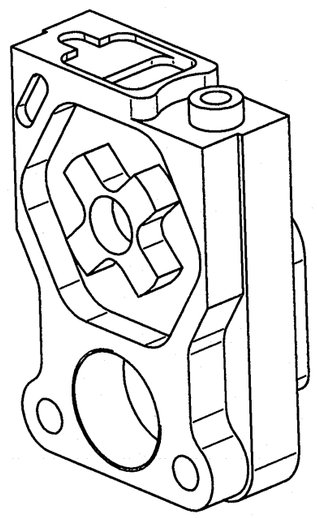

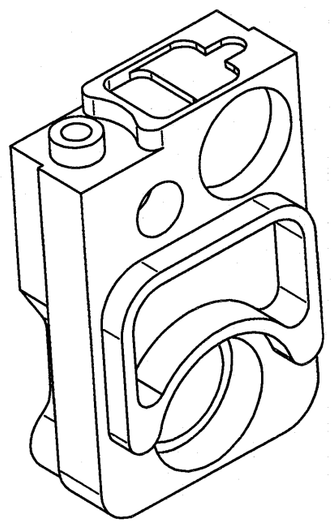

12H7	+0.018 / 0
48H7	+0.025 / 0
10H7	+0.015 / 0
38H7	+0.025 / 0
24h7	0 / -0.021
8h7	0 / -0.015

Ra 1,6 (Ra 0.8)

+0.3 / +0.2

-0.2 / -0.3

General tolerances ± 0.1
Tolérances générales ± 0.1
Allgemeintoleranzen ± 0.1

* = depth
gravité
tiefe

ISO E

CK45

updated: CH 09.09.2007

Worldskills Competition 2007, Shizuoka

Drawing Name	Project 4 BR				
Trade	07 CNC-Milling				
Scale	1:1	Time	6h	Number	