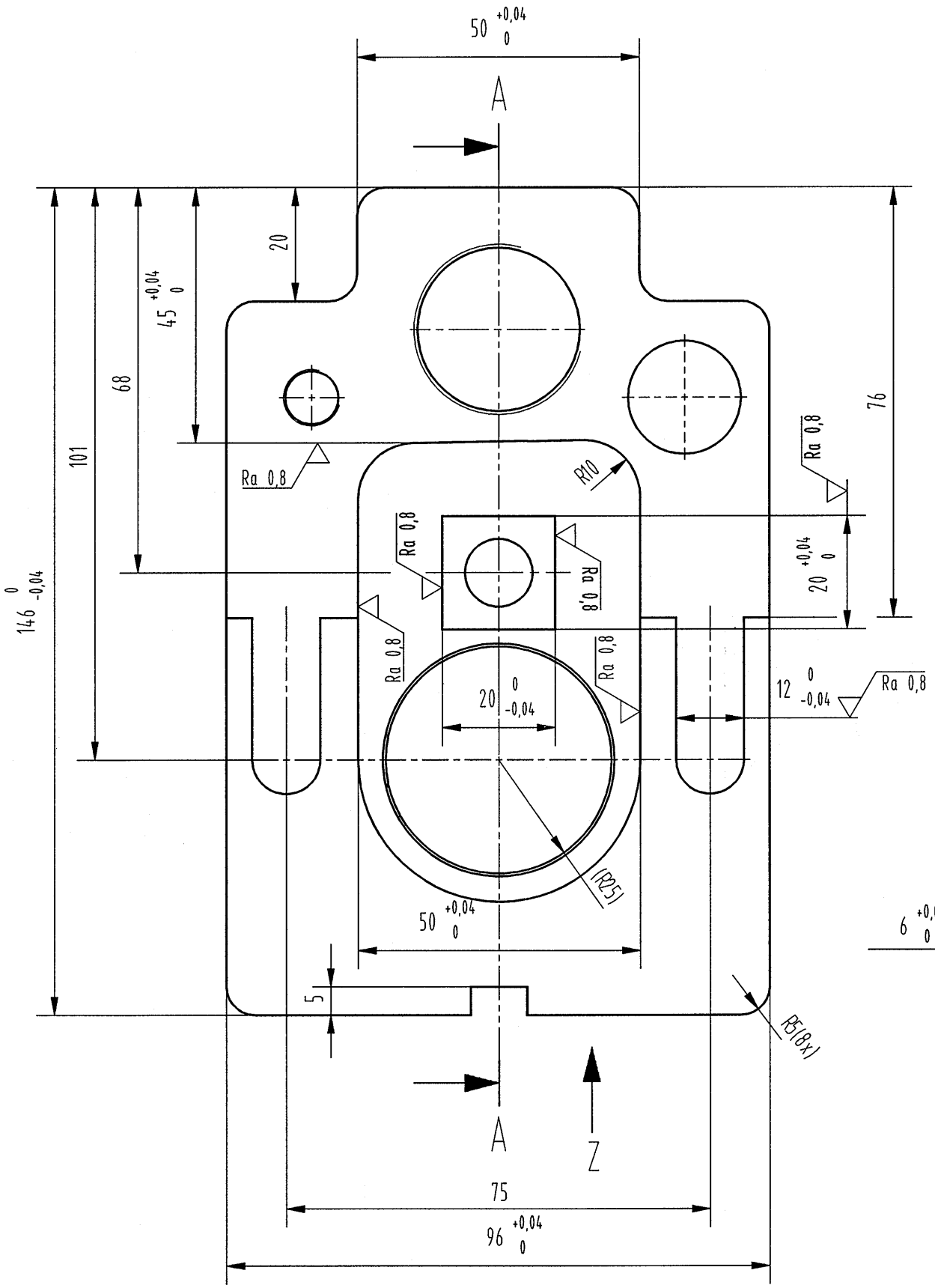

View Z

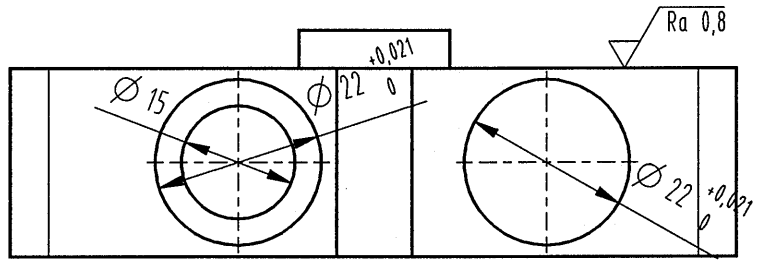

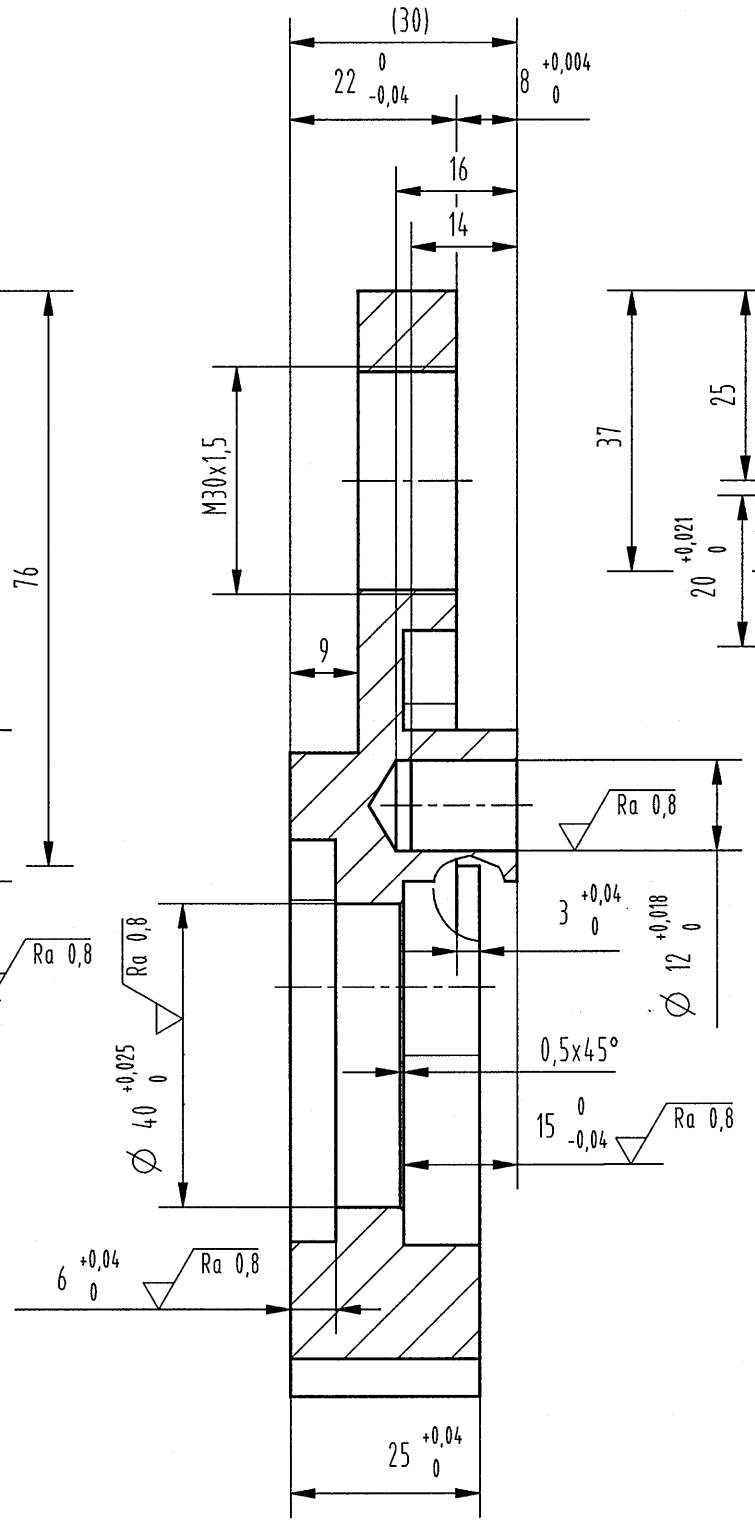

A-A

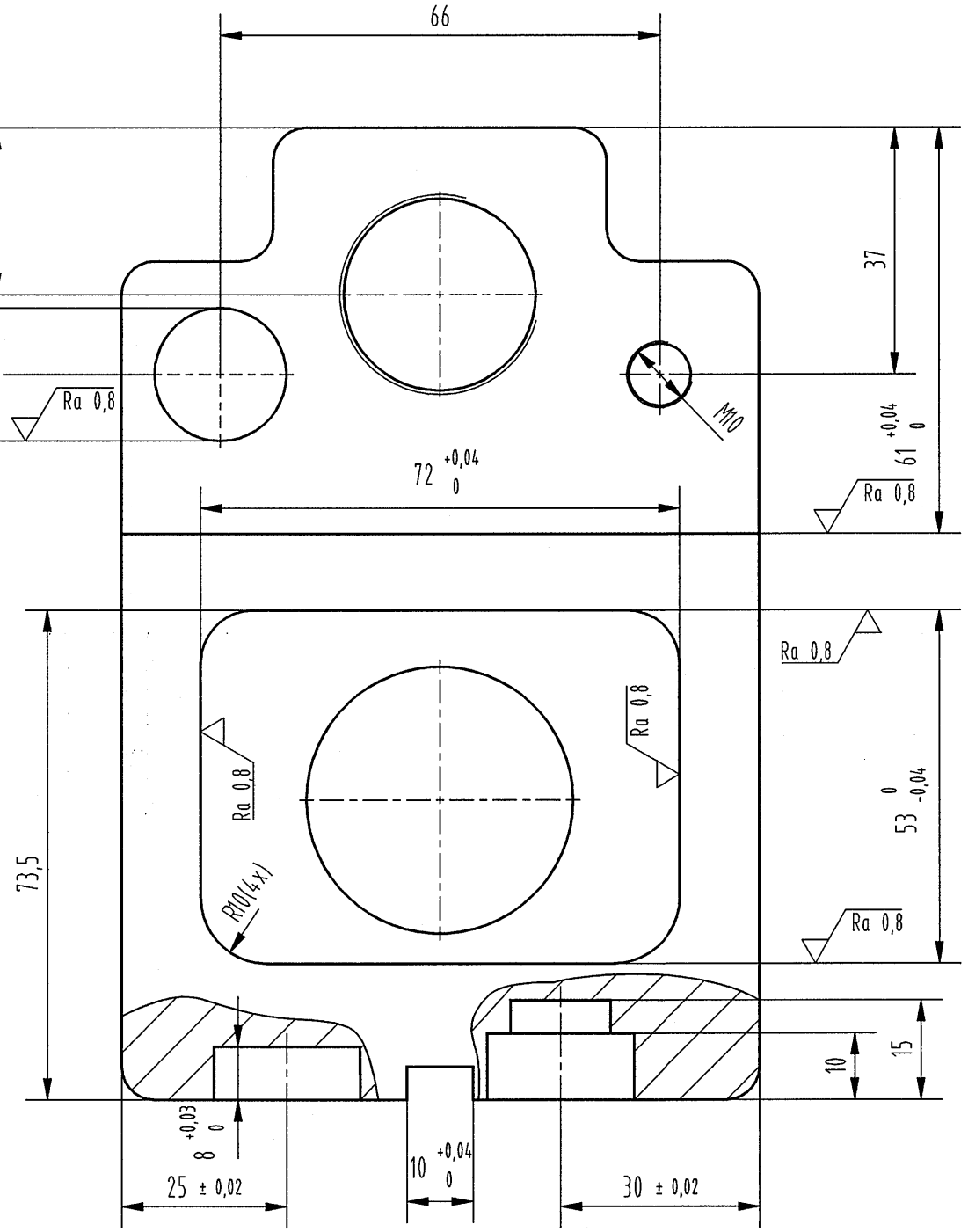

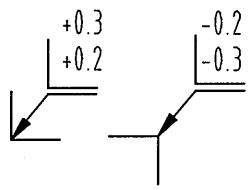

General tolerances ± 0.1
Tolérances générales ± 0.1
Allgemeintoleranzen ± 0.1

Ra 1.6 (Ra 0.8)

ISO E

updated: CH-02.10.2007

Worldskills Competition 2007, Shizuoka

Drawing Name	Projekt 2 AT / CH				
Trade	07 CNC-Milling				
Scale	1:1	Time	6h	Number	