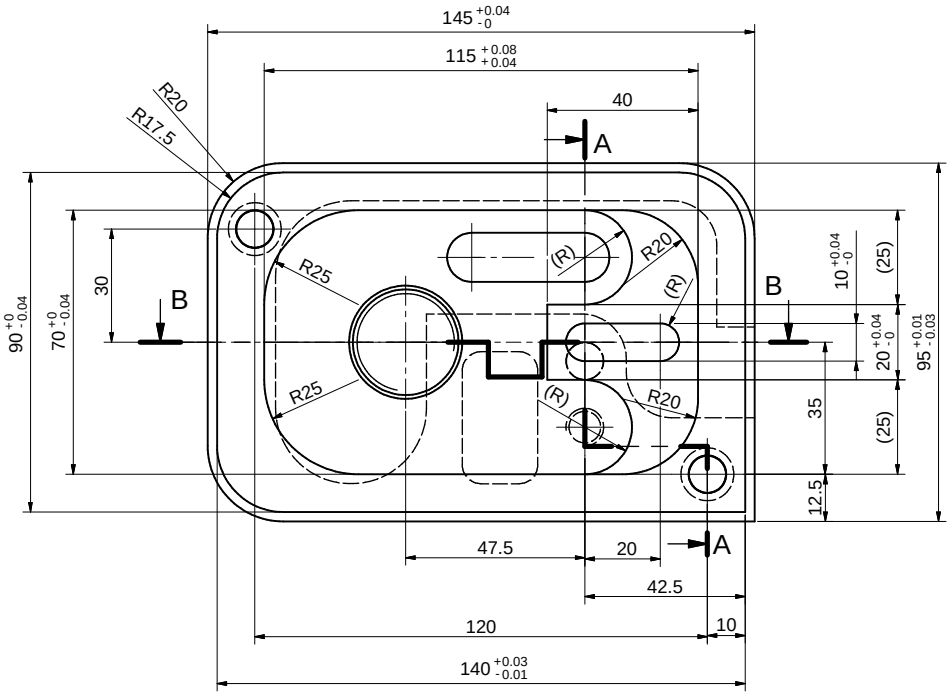

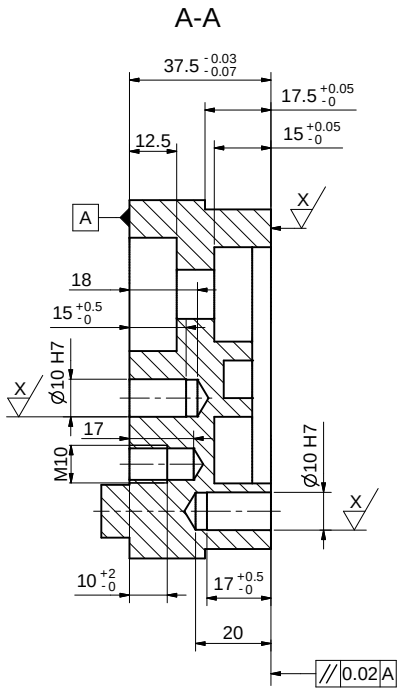

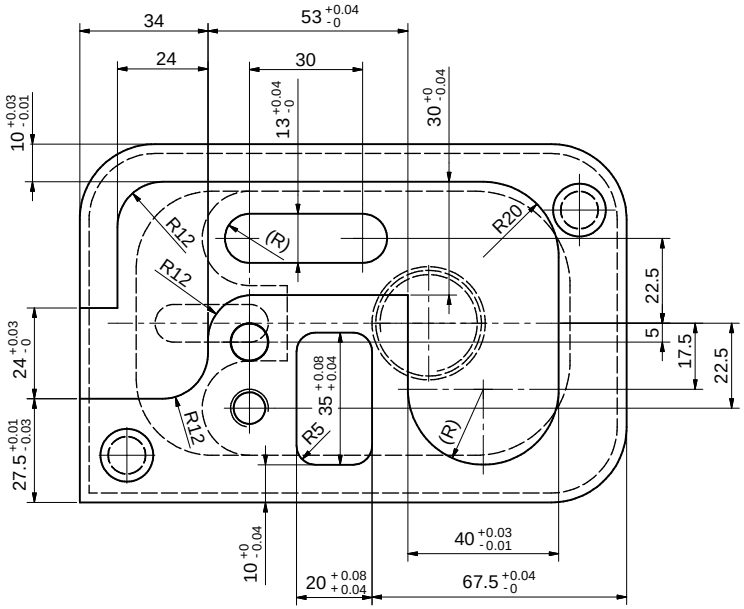

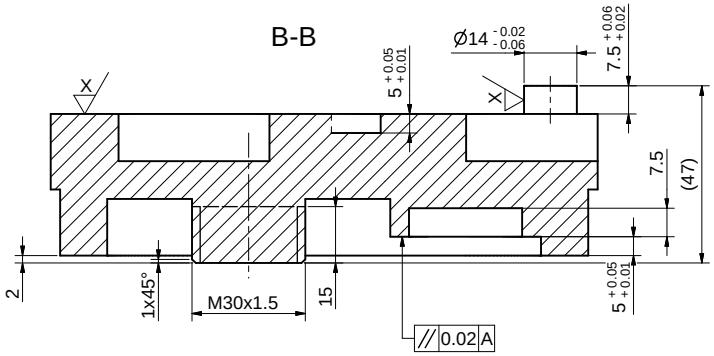

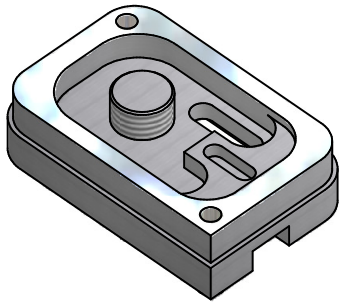

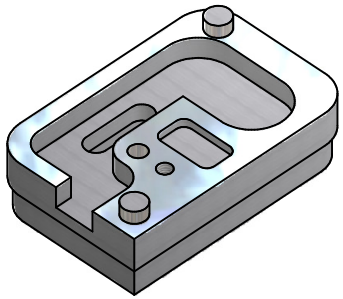

Ra 0.8 = X

Ra 16

Allgemeintoleranzen +/- 0.1
Tolérances générales +/- 0.1
General tolerances +/- 0.1

+0.3 +0.2 -0.2 -0.3

ISO E

updated: CH - 23.09.2007

Ø10 H7 = Ø10.015
Ø10

Worldskills Competition 2007, Shizuoka					
	Drawing Name	Projekt 3 AT			
	Trade	07 CNC- Milling			
	Scale	1:1	Time	6h	Number