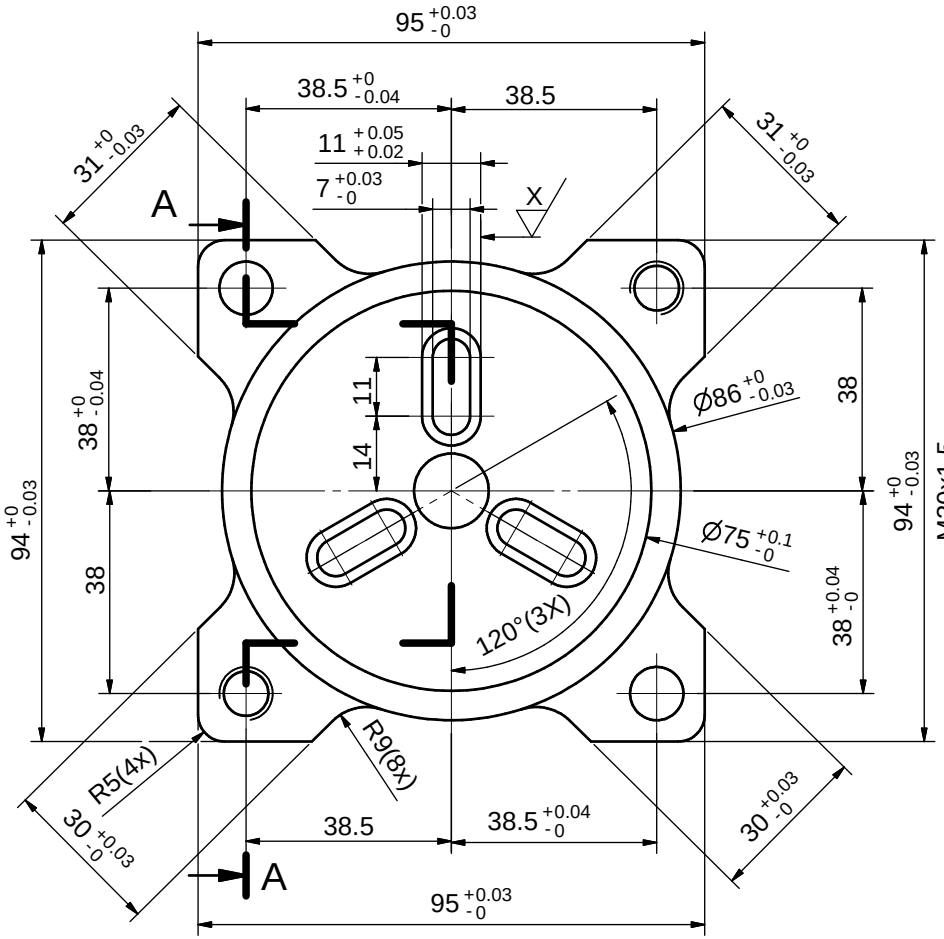

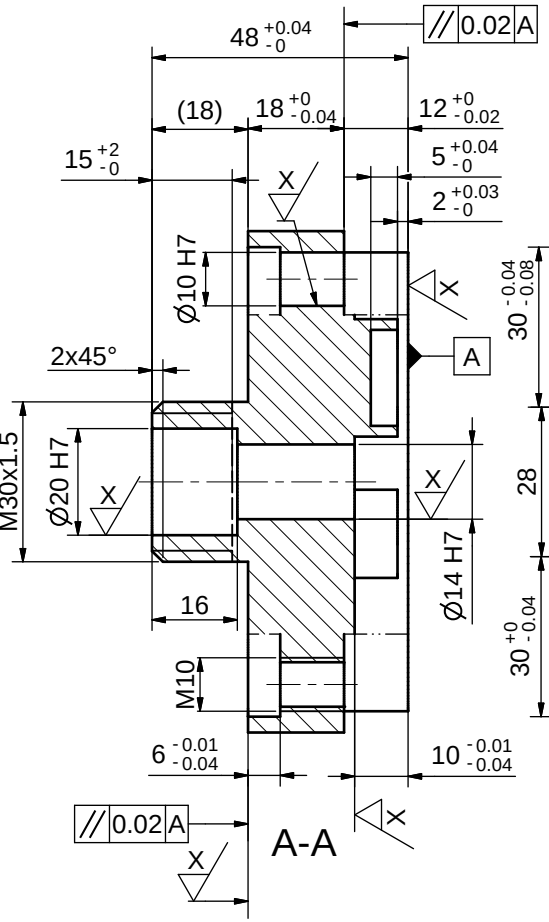

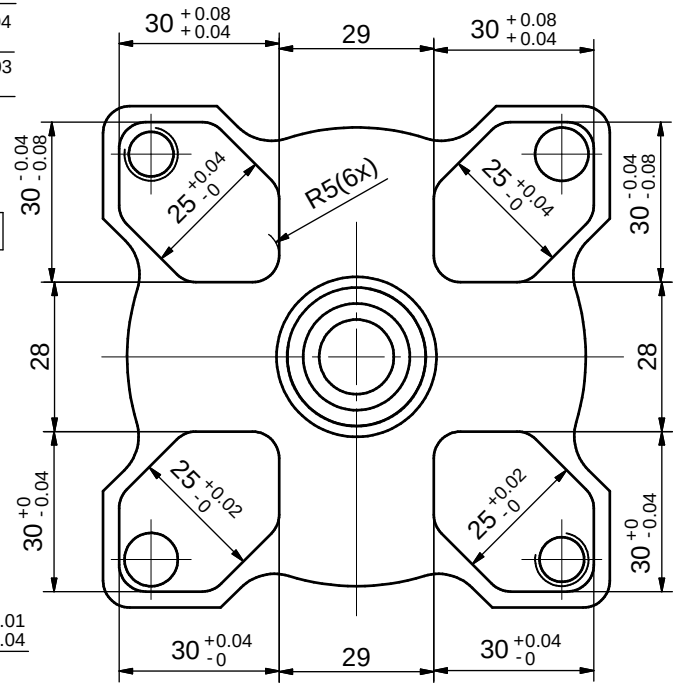

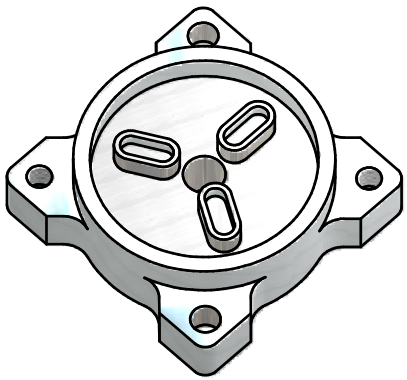

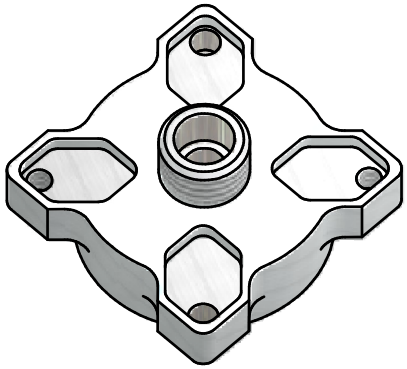

Ra 0.8 = X

Ra 16 ( )

Allgemeintoleranzen +/- 0.1
Tolérances générales +/- 0.1
General tolerances +/- 0.1

+0.3 +0.2 -0.2 -0.3

ISO E

updated: CH - 23.09.2007

Ø10 H7 = Ø10.015
Ø10

Ø14 H7 = Ø14.018
Ø14

Ø20 H7 = Ø20.021
Ø20

Worldskills Competition 2007, Shizuoka

Drawing Name	Projekt 1 FI				
Trade	07 CNC- Milling				
Scale	1:1	Time	4h	Number	