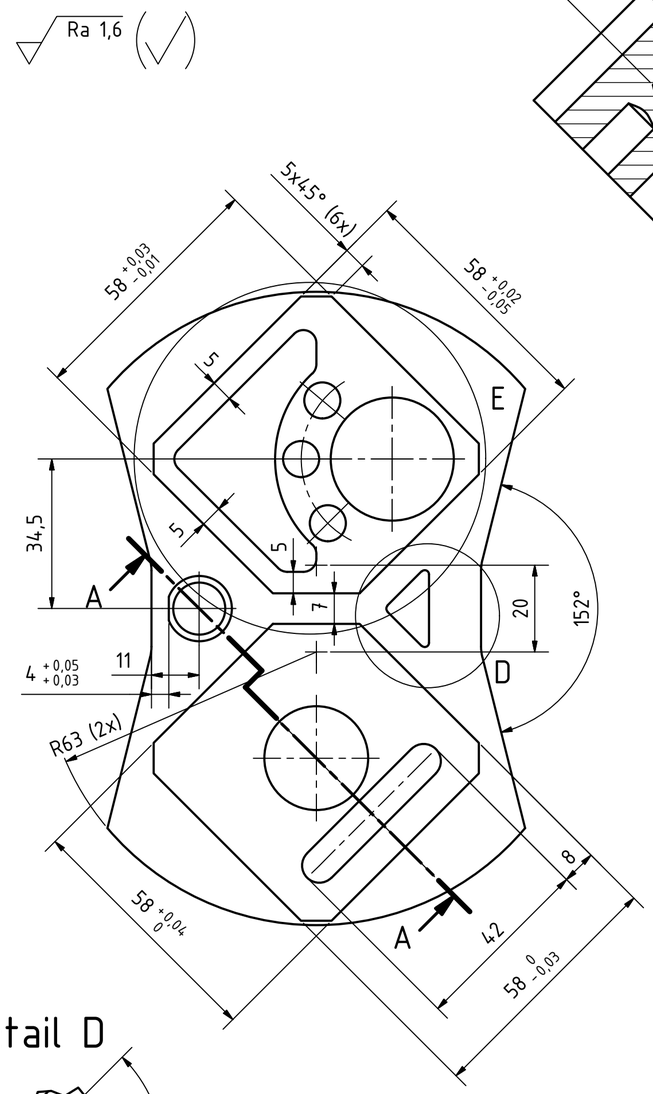

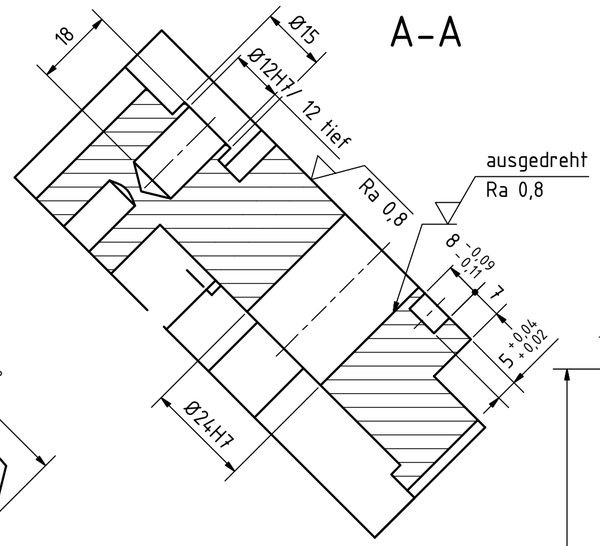

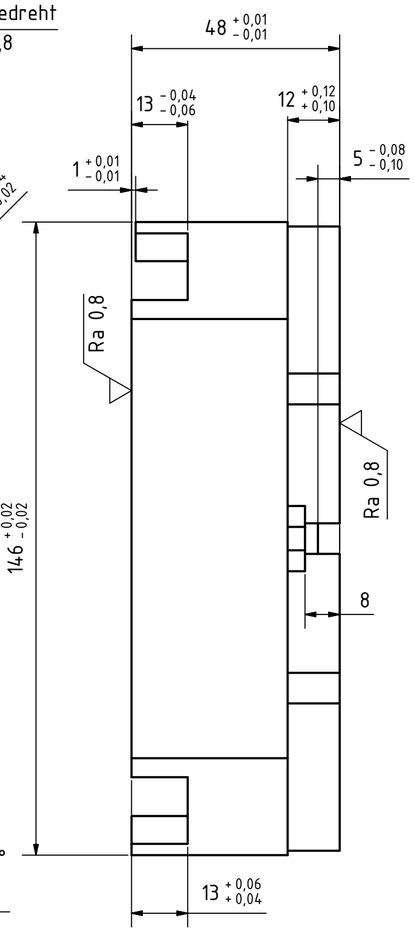

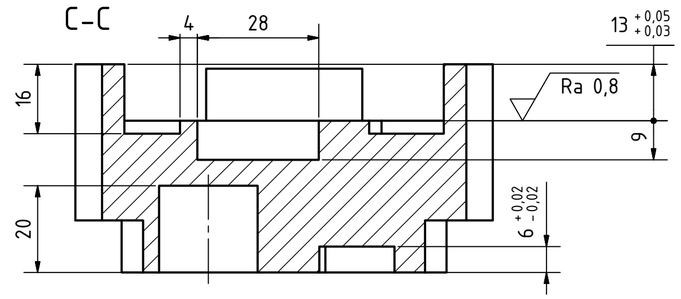

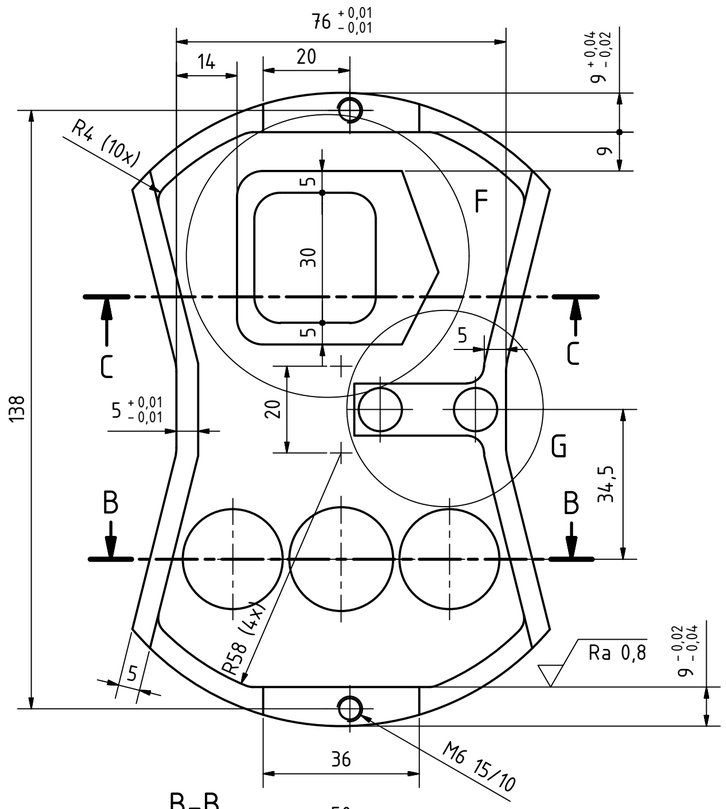

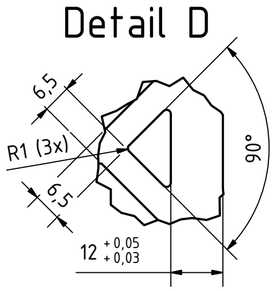

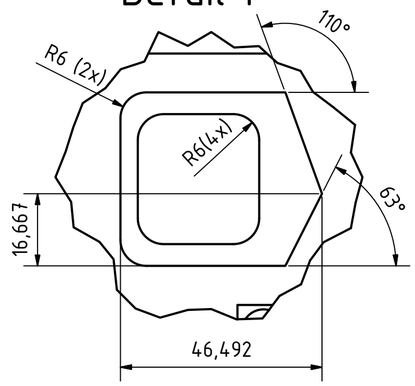

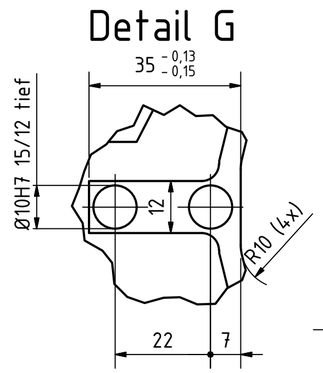

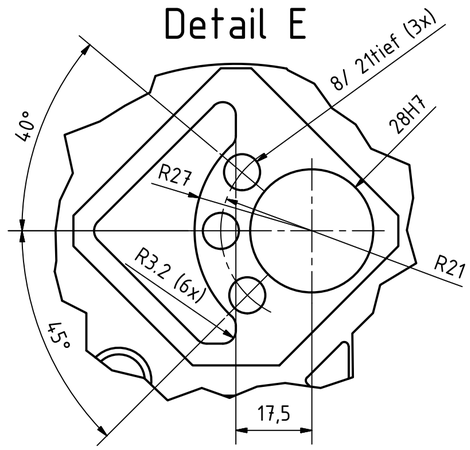

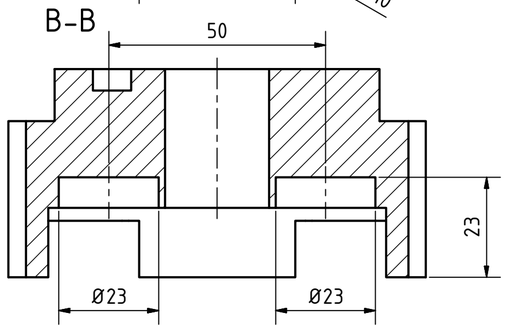

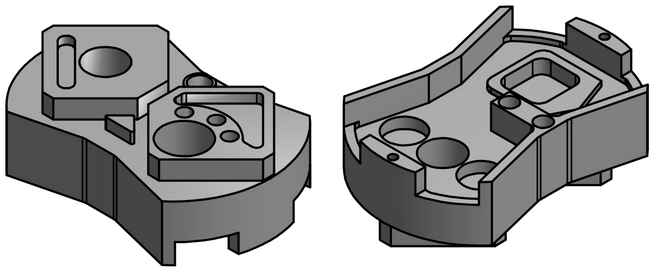

Toleranzen		
Nennmass	Unteres Abmass	Oberes Abmass
10H7	0	+15
12H7	0	+15
24H7	0	+21
28H7	0	+21

−0.4 −0.2 +0.2 0

Pos.	Quantity	Item code	Type			EN-AW-6082	100x50x150
						Material	Dimension
Application: Schweizermeisterschaft CNC-Fräsen SwissSkills Bern 2014					Scale 1:1	Remarks	0.793 kg
						Project-name	
Modifications				Date	Name	Description: Modul 5 Mastercam	Project on: ISO E
Rev:	Date	Name	Drawn	18.10.2013	J. Marti		
			Checked	22.10.2013	B. Kunz		
			Approved				
Swissmechanic						Drawing No. A2400.011	Rev: / Page A2